SAAB

Modification Bulletin

Aircraft Type: 91B, C

Reference	Date	No
91B, C. Centre Box Exchange of spring halves and fitting of profiles above landing gear and wing flap lever.	October 22, 1957	91.4/3B Supercedes MB 91.4/3
	Saab Service Dept. C Larsson	
	Saab Design. Dept. A J Andersson	Page 1 of 2
Urgency III	Royal Swedish Board of Civil Aviation S Fogelström	

Marking: -

Effect on weight distribution		
Weight change Lbs	Station In.	Moment change Lbsin.
-	-	-

Time of delivery for necessary parts

3 months after order

K/K

Drawings: Not essential

1075338 Centre box

1075375 Spring, centre box

Aircraft concerned:

91201 - 91320

Spare parts concerned:

-

Parts necessary per aircraft

Item	Fig.				
01	4	Spring half	1076001		
02	1	Profile	1119277	no drwg	
03	1	Profile	1119269	no drwg	
04	1	Profile	1119270	no drwg	
05	1	Shim	1119271	no drwg	
06	1	Shim	1119273	no drwg	
07	4	Rivet	AS 211501-3,2x9		Alum. 3514-3
08	4	Rivet	AS 211501-3,2x13		Alum. 3514-3
09	10	Rivet	AS 211501-2,5x11		Alum. 3514-3
10	40	Rivet	AS 211504-2,5x11		Alum. 3514-3

The following parts are obsolete:

Spring half 1078122-1 introduced by MB 91.4/3

The spring halves, covering the centre box openings for landing gear and wing flap lever, are to be exchanged for new, thicker ones and 4 profiles to be fitted on top of the cover plate as a protection of the spring halves.

Work procedure:

Dismount the plate covering the centre box. Drill off the rivets necessary and remove the out-going spring halves. Drill off the rivets as required to insert the profiles, item 02, 03 and 04, as well as the shims, item 05 and 06. Drill and rivet the new profiles and shims as well as the drilled-off details as per fig. Fit the springs, item 01, and rivet the details using item 07 and 08 as per fig. Fit the covering plate over the centre box.

JN 341201. 11. 54. 3000. Stjernquist

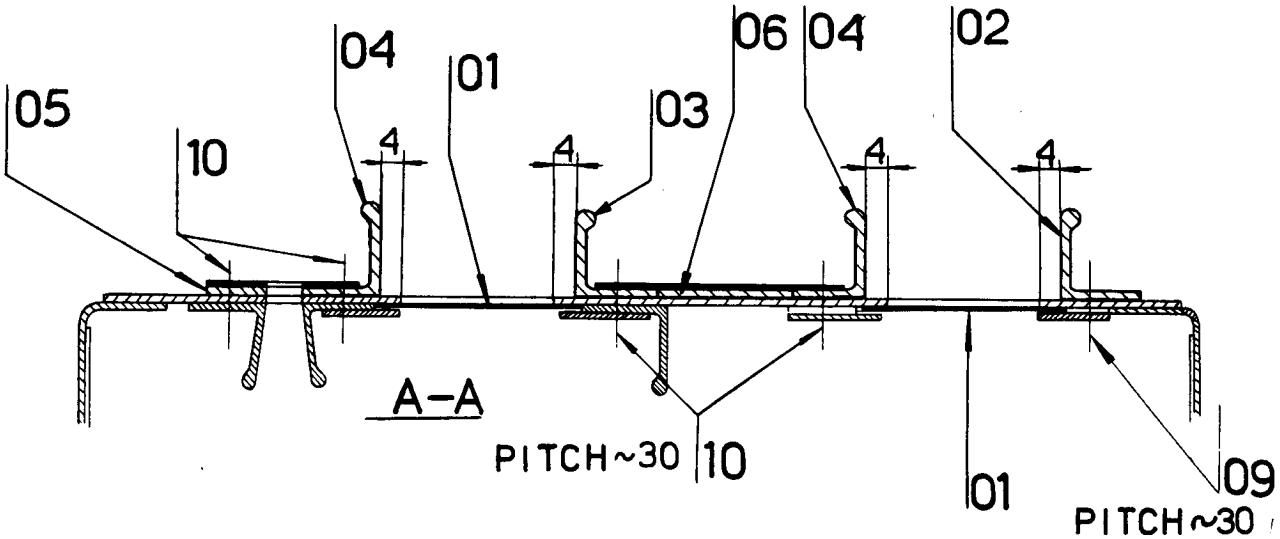

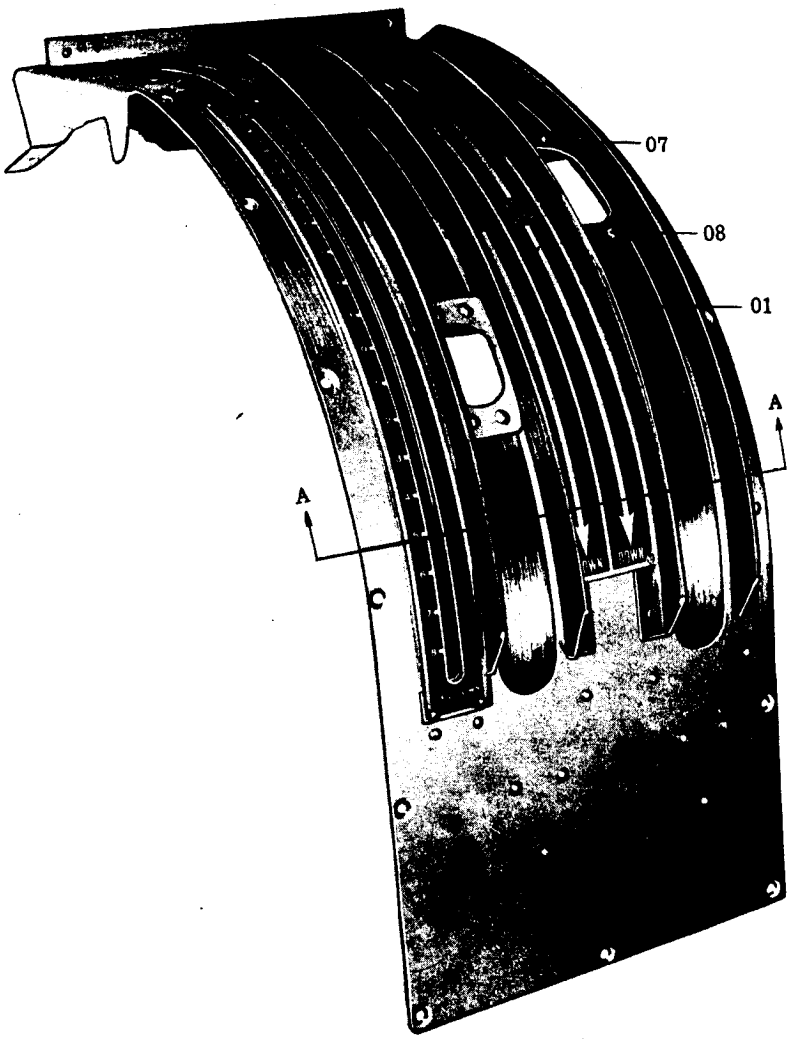

IN 341202. 8. 55. 3000 STÅLHAMMARS TR. A.-B.